C.I.P.	12,7 x 108 Country of Origin: RU	TAB. I Date 17-05-17 Revision

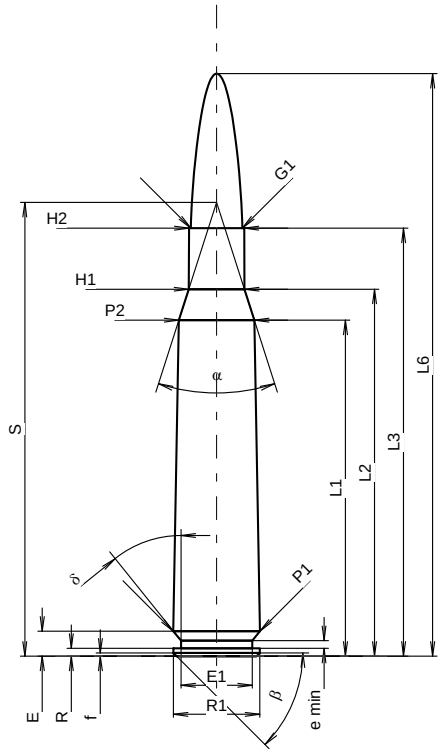

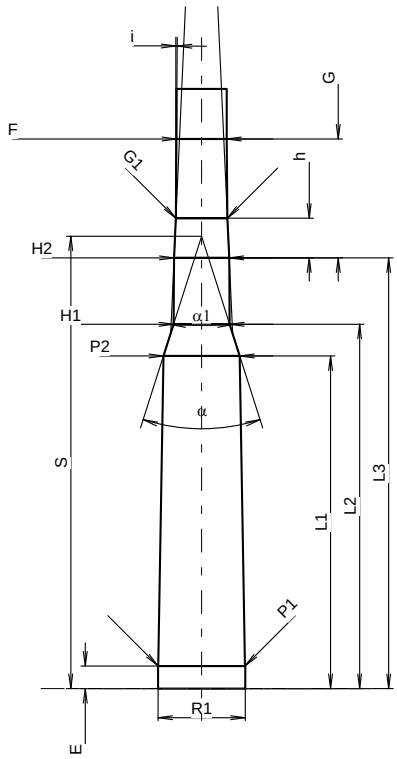

Scale 1:1.91

CARTRIDGE MAXI

Lengths

L1 *1)*	=	84.80	-0.20
L2 *1)*	=	92.60	-0.20
L3 *1)*	=	108.00	
L4	=		
L5	=		
L6	=	147.00	

Case Head

R	=	2.00	
R1	=	21.80	
R3	=		
E	=	6.30	
E1	=	18.00	
e min	=	1.90	
δ	=	38°44'	
f	=	0.80	
β	=	45°	

Powder Chamber

P1	=	21.85	
P2 *1)**	=	19.05	-0.20

Junction Cone

α *	=	35°32'34"	
S *	=	114.52	
r1 min	=		
r2	=		

Collar

H1 *	=	14.05	
H2 *1)*	=	13.90	

Projectile

G1 *1)*	=	13.01	
G2	=		
F	=		
L3+G *1)*	=	138.00	

Pressures (Energies)
Method Transducer

Pmax	=	3050	bar
PK	=	3508	bar
PE	=	3813	bar
M	=	25.00	
EE	=	19200	Joule

Miscellaneous Dimensions

Fe *1)3)*	=	0.15	
delta L	=	0.57	

CHAMBER MINI

Lengths

L1	=	83.95	
L2	=	91.95	
L3 *1)*	=	108.70	

Breech

R	=		
R1	=	22.00	
R2	=		
R3	=		
r	=		

Powder Chamber

E	=	5.70	
P1 *1)*	=	21.89	
P2 *	=	19.23	

Junction Cone

α *1)**	=	35°17'40"	
S *	=	114.17	
r1 max	=		
r2	=		

Collar

H1 *	=	14.14	
H2 *1)*	=	13.91	

Commencement of Rifling

G1 *1)**	=	13.00	
G *1)*	=	30.00	
α1	=	5°12'37"	
h *	=	10.00	
s	=		
i *1)**	=	0°29'13"	
w	=		

Barrel

F *1)**	=	12.66	
Z *1)*	=	13.00	

Grooves

b	=	2.80	
N	=	8	
u	=	380.00	
Q	=	129.72	mm²

Dimensions in << mm >>
Dimensions and Tolerances for Proof Barrels
see Appendix CR 1.

Notes:
1) Check for safety reasons
3) Headspace on Shoulder
* Basic dimensions

Reproduction forbidden as well as in the form of extracts without approval of C.I.P.